ECG Electrode Connector, 6-Channel Common Reference

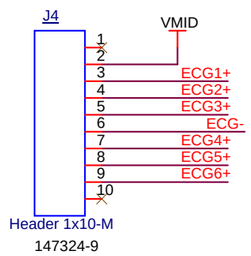

Mates w/ Samtec
SMS-10-26C-F-40.00-S-K

ECG Electrode Connectors, 3-Channel Differential

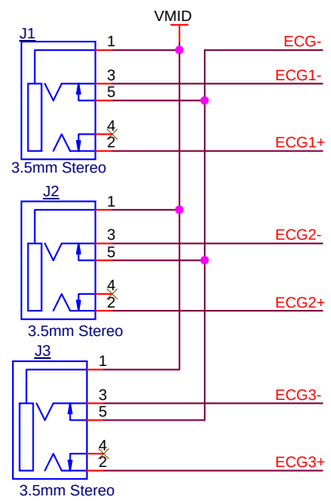

Mates w/
Sparkfun
CAB-12970

Tip Red
Ring Blue
Sleeve Black

ECG Preamps

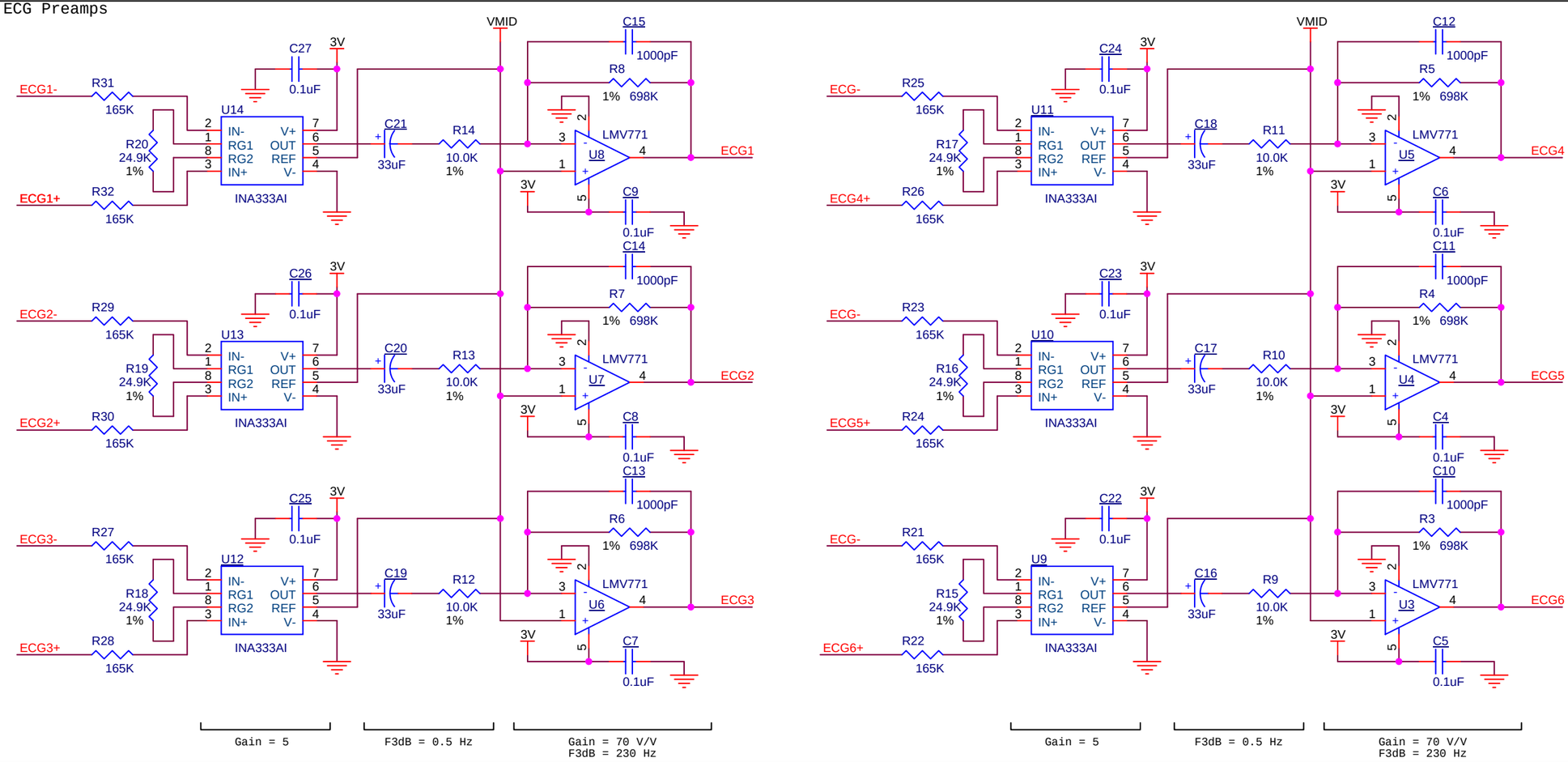

IOLab Connectors

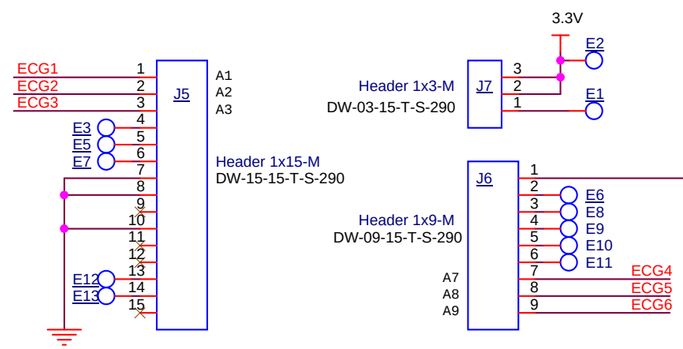

3.3 mV Test Signal

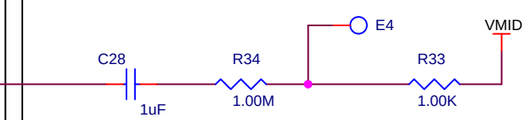

Requires 10 Hz
Squarewave output at
Digital I/O #1

Power Supply Regulators

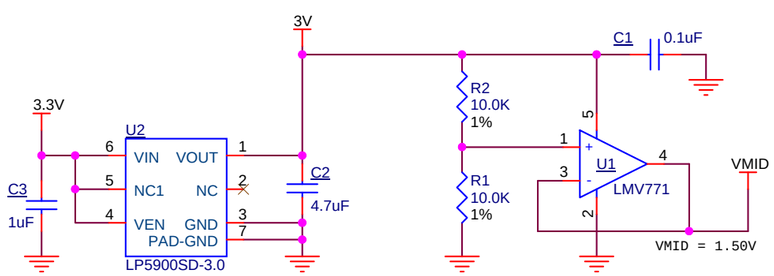

THIRD ANGLE PROJECTION

FEATURES AND DIMENSIONS NOT SHOWN SHALL BE VERIFIED IN THE DATABASE. DRAWING SHOULD NOT BE SCALED

Indesign
© 2013 ALL RIGHTS RESERVED

PROPRIETARY
USE PURSUANT TO
COMPANY INSTRUCTIONS

DRAWING TITLE: 6-Channel ECG Preamp

PROJECT NAME: IOLab

ENGR: J. McIntyre

DRAWN: J. McIntyre

SIZE	DATE	DRAWING NO.	REV
B	9-2-2014	1814E25	P4

SCALE: NO SCALE

SHEET 1 OF 1